Air Duct Thermometer
Flue Gas Thermometer
V-line Thermometer

REXOTHERM

RX-452 BR

RX-508

RX-502 BR

RX-208

RX-740-760

RX-741-761

Temperature ranges

-40+ 40°C	+50+360°C	
-40+ 70°C	+50+400°C	
-30+ 50°C	+50+500°C	
-20+ 60°C		
0+ 60°C		
0+ 100°C		
0+ 160°C		
0+ 200°C		

Rexotherm AB Box 817, S-565 18 Mullsjö **Tel:** 0392-377 00 **E-post:** info@rexotherm.com

REXO THERM

Technical Data

RX 740-760, 741-761, 452BR-502BR, 406-208-508

REXOTHERM

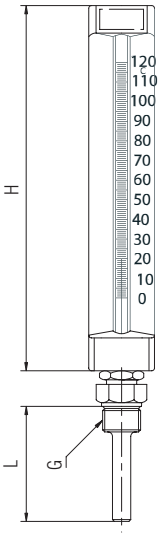

RX-740-760

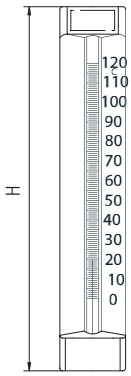

RX-741-761

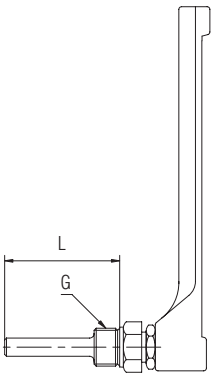

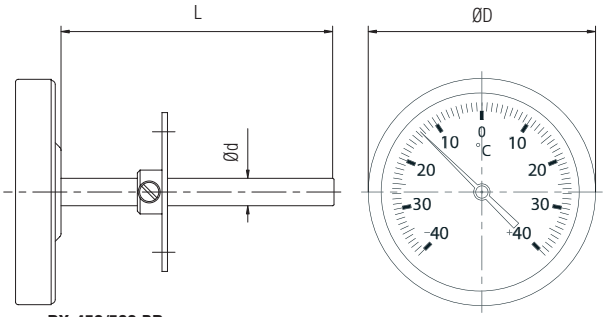

RX-452/502 BR

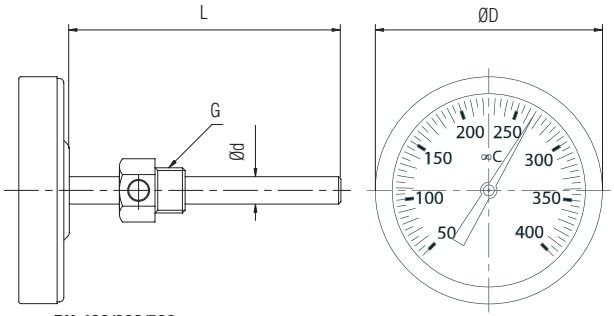

RX-406/208/508

Dimensions

See table at side

Design

Type 452 - 502 Standard design with back stem entry
Type 208 - 508 Standard design with back stem entry
Type 740 - 761 Glass capillary with back or bottom stem entry

Measuring System

Bimetal
Liquid filled glass capillary

Casing / Bezel

Type 452 - 502 Zincified steel with plated bezel
Type 208 - 508 Black painted steel with plated bezel
Type 740 - 761 Black painted composite material

Max. Working Temperature

Full scale value at continuous operation
10% over-load capacity for temporary operation only

Degree of protection

IP 50

Mounting

Back or bottom entry

Immersion Length

See table below

Working pressure

V-line PN25

Thermowell V-line

Available in dezincified brass or stainless steel on request
Male threading G 1/2” or G 3/4”

Type	ØD (mm)	Ød (mm)	L
RX 452 BR	66	9 alt. 10	150
RX 502BR	83	10	200

Type	ØD (mm)	Ød (mm)	L	G
RX 406	51	6	150	–
RX 208	66	6	250	ISO-G 1/4
RX 508	83	10	250	ISO-G 3/8

Type	H (mm)	L (mm)	G
RX 740	110	63 alt. 100	G 3/8” alt. G 1/2”
RX 750	150	63 alt. 100	G 3/8” alt. G 1/2”
RX 760	200	63, 100 alt. 160	G 3/8” alt. G 1/2”
RX 741	110	63 alt. 100	G 3/8” alt. G 1/2”
RX 751	150	63 alt. 100	G 3/8” alt. G 1/2”
RX 761	200	63, 100 alt. 160	G 3/8” alt. G 1/2”

Rexotherm AB Box 817, S-565 18 Mullsjö **Tel:** 0392-377 00 **E-post:** info@rexotherm.com

REXO THERM