Marine Thermometer

Stabilized against vibrations

REXOTHERM

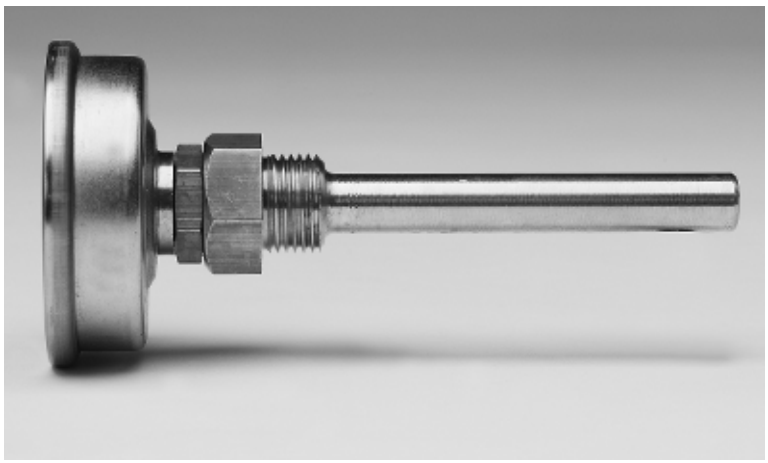

RX-991 BL

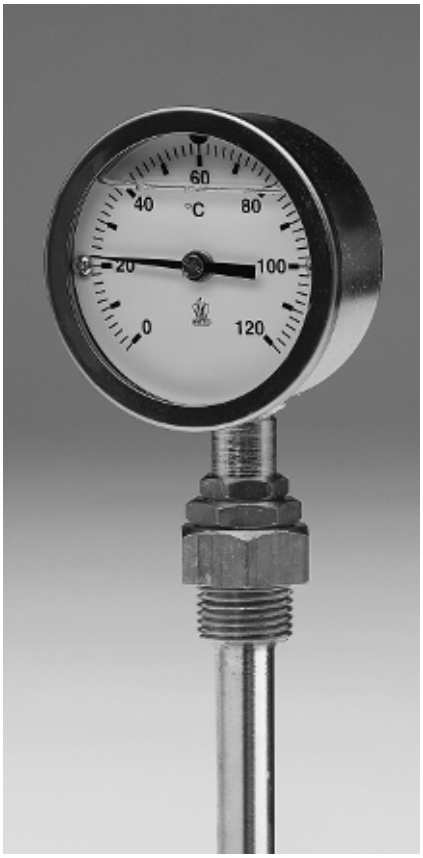

RX-1991 BL

Temperature ranges

0+120°C
0+160°C
0+200°C
0+300°C

Rexotherm AB Box 817, S-565 18 Mullsjö **Tel:** 0392-377 00 **E-post:** info@rexotherm.com

Technical Data

RX 991 BL, 1991 BL

REXOTHERM

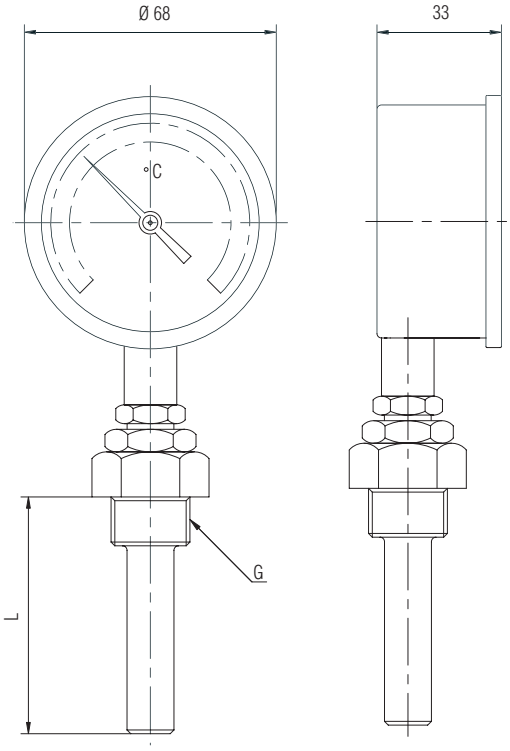

RX-1991 BL

Dimensions
See table below

Design
Thermometer with back and bottom stem entry respectively, complete with thermowell of dezincified brass

Casing /Bezel
991 - 1991 zincified casing with stainless bezel, silicone oil filled

Measuring System
Bimetal

Max. Working Temperature
Full scale value at continuous operation
10% over-load capacity for temporary operation only

Degree of protection
IP 65

Mounting
Back and bottom stem entry respectively

Immersion Length
See table below

Working pressure
PN25

Thermowell
Male threading M18 x 1,5 or G 1/2” alternatively

Type	G	L (mm)			
RX 991 BL	M18 x 1.5 alt. G 1/2”	63	75	100	125
RX 1991 BL	M18 x 1.5 alt. G 1/2”	63	75	100	125

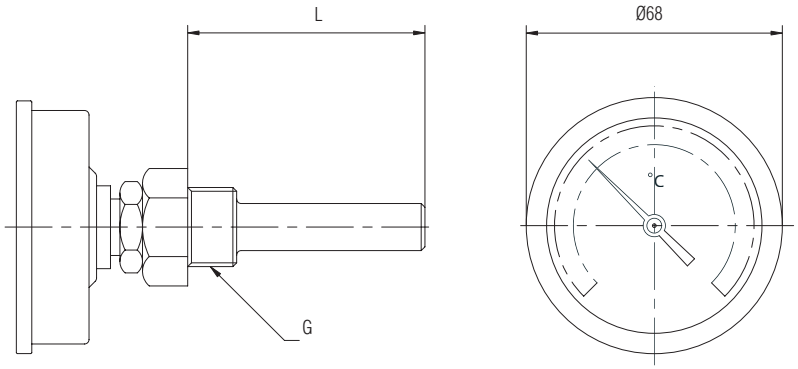

RX-991 BL

Rexotherm AB Box 817, S-565 18 Mullsjö **Tel:** 0392-377 00 **E-post:** info@rexotherm.com