Bimetal Thermometer

Universal type

REXOTHERM

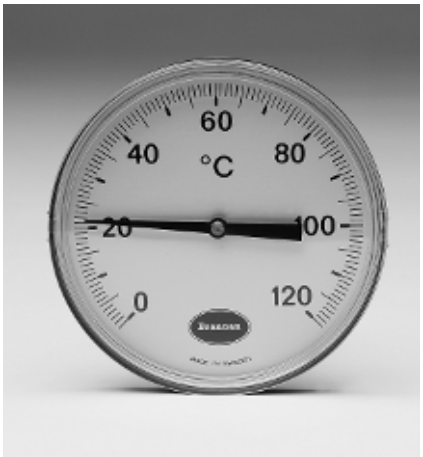

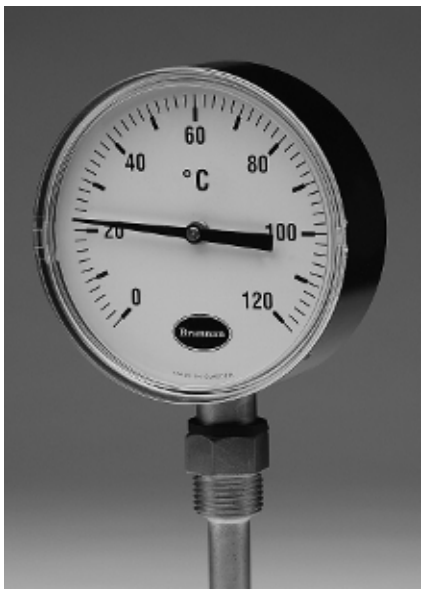

RX-1601 B

RX-1671

RX-601 B

Temperature ranges

-40+ 40°C
-30+ 50°C
-20+ 60°C
0+ 60°C
0+ 100°C
0+ 120°C
0+ 160°C
0+ 200°C

Rexotherm AB Box 817, S-565 18 Mullsjö **Tel:** 0392-377 00 **E-post:** info@rexotherm.com

REXO THERM

Technical Data

RX 1671, 1601 B, 601 B, 671

REXOTHERM

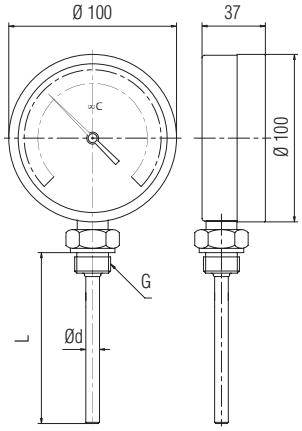

RX-1671

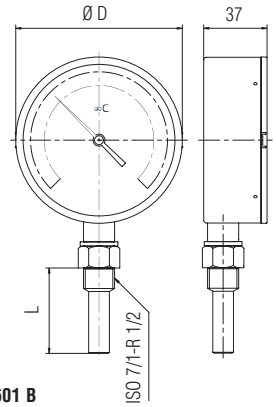

RX-1601 B

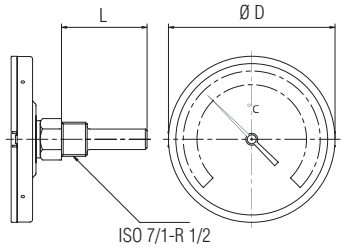

RX-601 B

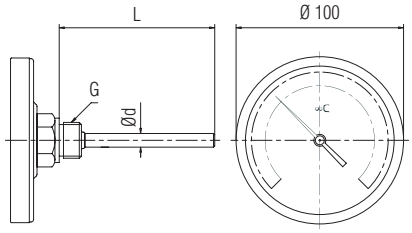

RX-671

Dimensions
See table at side

Design
Thermometer in standard design with back or bottom stem entry, complete with extra thermowell in brass
alternatively fixed connection without thermowell

Measuring System
Bimetal

Casing / Bezel
Type 451 - 1731B Black painted steel with snap-in window
Type 671 - 1671 Stainless steel

Max. Working Temperature
Full scale value at continuous operation
10% over-load capacity for temporary operation only

Degree of protection
IP 65

Mounting
Back or bottom entry

Immersion Length
See table below

Working pressure
PN25

Thermowell
Male threading G 1/2” or G 3/4”

Type	Ød (mm)	L (mm)	G
RX 671	8/10/12	On request	On request
RX 1671	8/10/12	(= min. 50)	

Type	ØD (mm)	L (mm)				
RX 451/501/601/731	66/83/100/150	50	63	100	150	200
RX 1501/1601/1731	83/100/150	50	63	100	150	200

Rexotherm AB Box 817, S-565 18 Mullsjö **Tel:** 0392-377 00 **E-post:** info@rexotherm.com