Thermometer, Industrial type

Heavy duty version

REXOTHERM

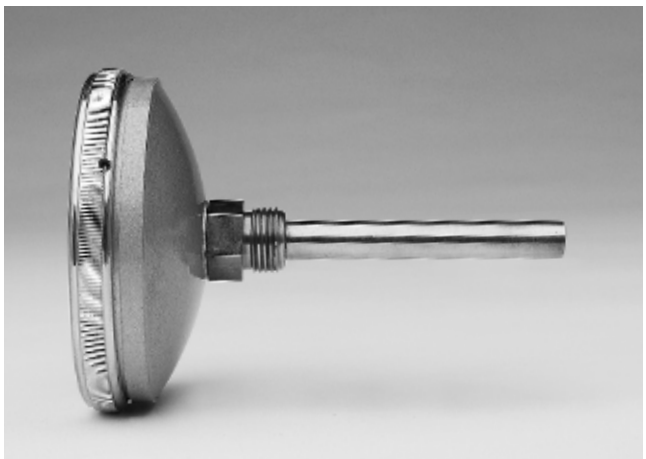

RX-650

RX-1650

Temperature ranges

-40+ 40°C	0+250°C
-30+ 50°C	0+300°C
-30+ 80°C	+50+360°C
-20+ 60°C	+50+400°C
0+ 60°C	+50+500°C
0+100°C	
0+120°C	
0+160°C	
0+200°C	

Rexotherm AB Box 817, S-565 18 Mullsjö **Tel:** 0392-377 00 **E-post:** info@rexotherm.com

REXO THERM

Technical Data

RX 1650, 650

REXOTHERM

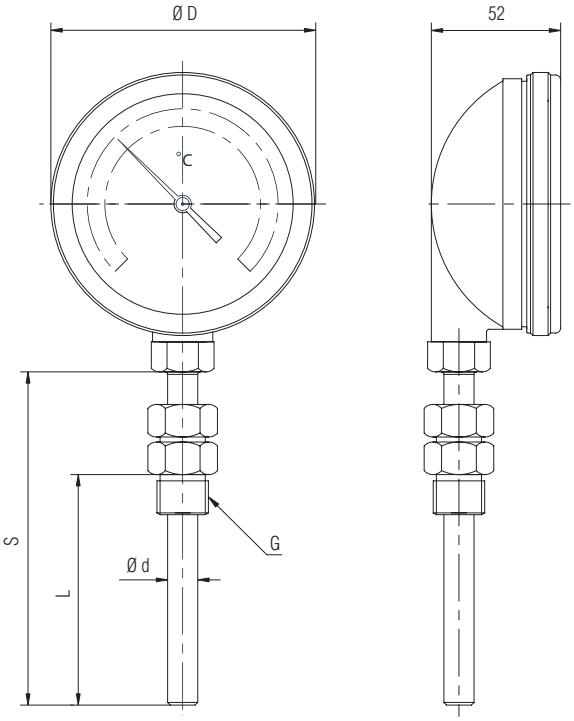

RX-1650

Dimensions
See table below

Design
Thermometer with back and bottom stem entry respectively

Casing /Bezel
651, 1551, 1651 Die-cast casing grey enamelled with chrome ring

Measuring System
Bimetal

Max. Working Temperature
Full scale value at continuous operation
10% over-load capacity for temporary operation only

Degree of protection
IP 63

Mounting
Back and bottom stem entry respectively

Immersion Length
To customers' specification

Working pressure
PN25

Thermowell
Available in dezincified brass or stainless steel on request
Male threading G 1/2" or G 3/4"

Type	D (mm)	Ød (mm)	S and L (mm)	G
RX 652 C	105	8/10/12	On request	On request
RX 1552 C/RX 1652 C	90/105	8/10/12	(L = min. 100)	

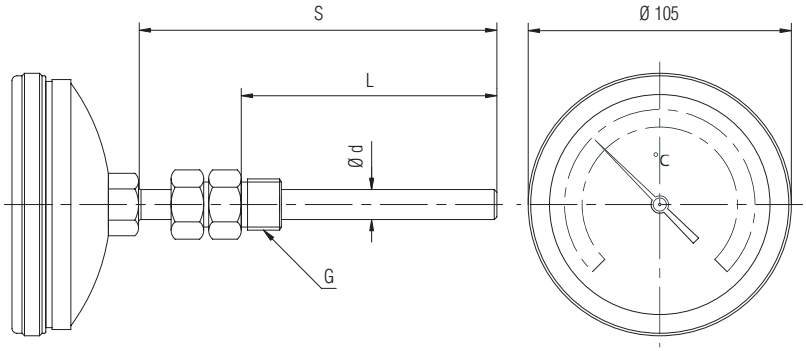

RX-650

Rexotherm AB Box 817, S-565 18 Mullsjö **Tel:** 0392-377 00 **E-post:** info@rexotherm.com

REXO THERM