Thermometer, Industrial type

Stainless steel design

REXOTHERM

Design

- According to European Norm EN 60529.
- Accuracy 1,5% of full scale value.
- Hermetically sealed with bayonet fitting.
- Degree of protection IP65.

Application

Thermometer in stainless design with sealed casing. Suitable for measurement in aggressive and corrosive environments.

Accessories

Coloured zones
Loose red pointer
Tell tale pointer
Electrical contact device
(for casing Ø 100 and 150 mm only)

Temperature Ranges	
-40+40°C	0+160°C
-30+50°C	0+200°C
-20+60°C	0+250°C
-10+50°C	0+300°C
0+60°C	+50+360°C
0+100°C	+50+400°C
0+120°C	+50+500°C

Type No	Connection	Mounting
RX-481- 781	Back, fixed connection	Direct
RX-482- 782	Back, plain stem	Direct
RX-482/C- 782/C	Back, sliding union	Direct
RX-482/G- 782/G	Back, swivel nut	Direct
RX-482/GÖ- 782/GÖ	Back, female nut	Direct
RX-1481- 1781	Bottom, fixed connection	Direct
RX-1482- 1782	Bottom, plain stem	Direct
RX-1482/C- 1782/C	Bottom, sliding union	Direct
RX-1482/G- 1782/G	Bottom, swivel nut	Direct
RX-1482/GÖ- 1782/GÖ	Bottom, female nut	Direct

Measuring System: Bimetal

Standard Connection: G 3/8 B
G 1/2 B

Rexotherm AB Box 817, S-565 18 Mullsjö **Tel:** 0392-377 00 **E-post:** info@rexotherm.com

REXO THERM

Technical Data

All Types

REXOTHERM

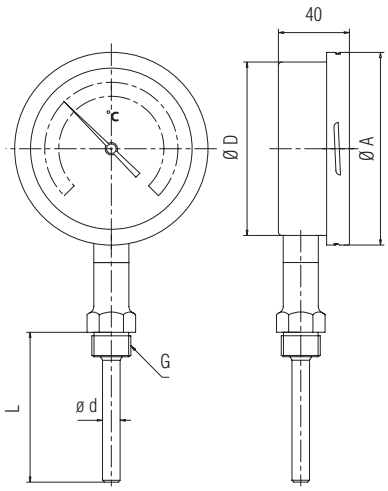

RX-1481-1781

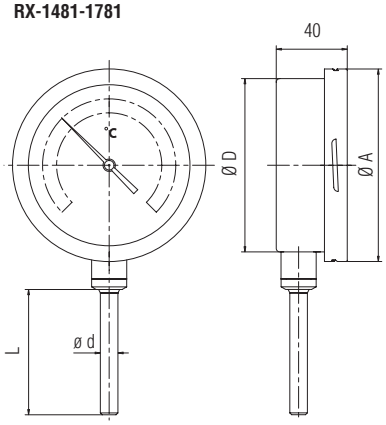

RX-1482-1782

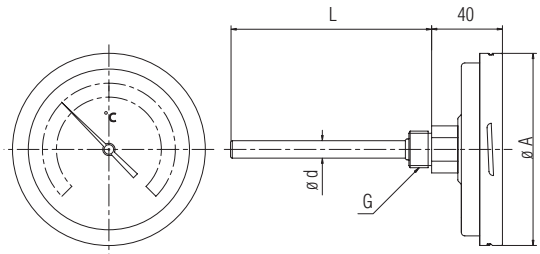

RX-481-781

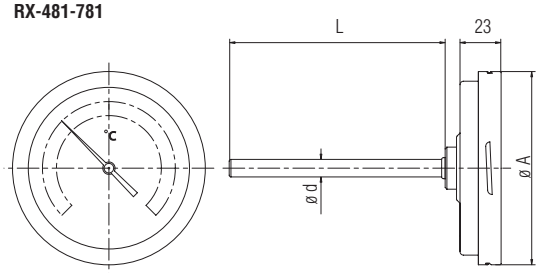

RX-482-782

Dimensions
See table at side.

Design
Thermometer with stainless case and back or bottom stem entry of stainless steel.
Connections see table overleaf.

Measuring System
Bimetal.

Casing/Bezel
Stainless steel AISI 304.

Max. Working Temperature
Full scale value at continuous operation, 10% over-load capacity for temporary operation only.

Degree of protection
IP 65.

Mounting
Back or bottom entry.

Immersion Length
To customers' specifications.

Working Pressure
Max. working pressure without thermowell = 25 bar.

Special Design
Liquid filled casing and stem for vibration protection.

Thermowell
Screw-in types, flanged or weld-in pockets to be supplied in various materials such as stainless steel, Hastelloy, Inconell or Kanthal. Thermowells can be supplied with material analysis certificates.

	Back stem entry				Bottom stem entry			
Dim Ø	**65**	**80**	**100**	**150**	**65**	**80**	**100**	**150**
AØ	75	90	110	160	75	90	110	160
DØ	–	–	–	–	65	80	100	150

Rexotherm AB Box 817, S-565 18 Mullsjö **Tel:** 0392-377 00 **E-post:** info@rexotherm.com

REXO THERM