Pressure Gauge RX-2010-50, 63

Standard design, class 2,5

REXOTHERM

Design

- Accuracy class 2,5
- To operate up to 75% of scale at constant pressure

Application

Pressure gauge in standard design for measurement of liquids and gases with non-corrosive media. Not suitable for vibration.

Pressure Ranges	
- 1-0 bar/psi	0-6 bar/psi
-1-0-1,5 bar/psi	0-10 bar/psi
-1-0-3 bar/psi	0-16 bar/psi
-1-0-5 bar/psi	0-25 bar/psi
-1-0-9 bar/psi	0-40 bar/psi
0-0,6 bar/psi	0-60 bar/psi
0-1 bar/psi	0-100 bar/psi
0-1,6 bar/psi	0-160 bar/psi
0-2,5 bar/psi	0-250 bar/psi
0-4 bar/psi	0-400 bar/psi

Type No.	Connection	Mounting
RX-2010	bottom	direct
RX-2011	back	direct

Measuring system:	C-type bronze bourdon.
Connection standard:	G 1/4 B G 1/8 B (50 mm)

Rexotherm AB Box 817, S-565 18 Mullsjö **Tel:** 0392-377 00 **E-post:** info@rexotherm.com

REXO THERM

Tecnical Data

RX-2010-50, 63

REXOTHERM

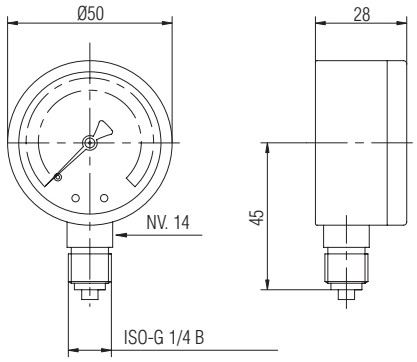

2x-2010-50

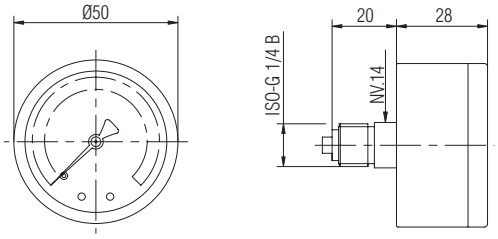

2x-2011-50

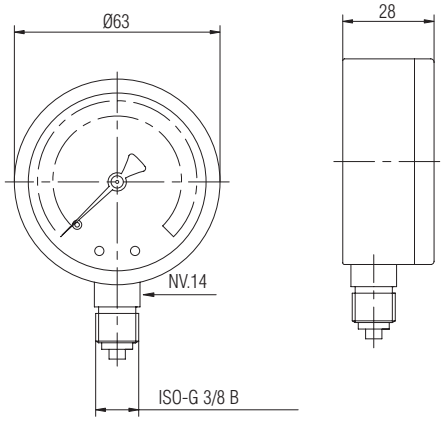

2x-2010-63

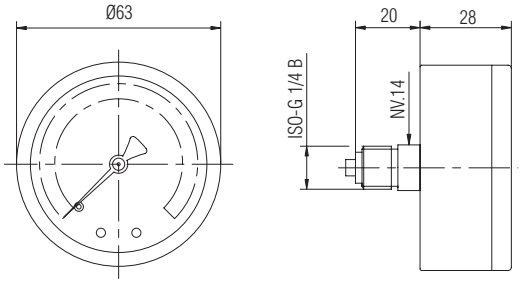

2x-2011-63

Dimension
See drawings at side.

Measuring System/Material
C-type bronze bourdon.

Movement
Brass.

Dial
Concentric scale, white dial and black markings.

Units of measurement
Gauges are supplied as standard with dual scale bar/psi,
Single scale in bar only can be supplied.
See table overleaf for standard ranges.

Accuracy
+-2,5% of scale.

Load Capacity

Max.load:	75% of range for static working pressure.
	65% of range for cyclic pressure.
Overload	Up to 100% of scale for temporary surge.

Casing
Black ABS plastic.

Window
Acrylic, snap-in window.

Mounting
See table overleaf and drawings at side.

Connection
G 1/4 standard.
G 1/8 (for RX-2010-50).

Max. Working Temperature
+70°C .

Rexotherm AB Box 817, S-565 18 Mullsjö **Tel:** 0392-377 00 **E-post:** info@rexotherm.com

REXO THERM