Pressure Gauge RX-2010-100

Industrial Design, class 1,0

REXOTHERM

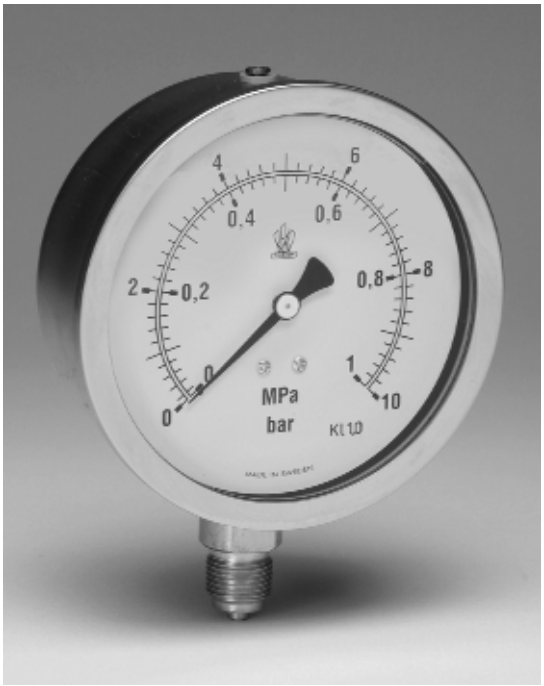

Design

- Acc. to European Norm EN 837-1:1998.
- Accuracy class 1,0.
- To operate up to 100% of scale at constant pressure.
- Heavy duty movement and bourdon.
- Blow out device.
- Degree of protection IP65.

Application

The gauge is suitable for measurement of pressure of liquids and gases for heavy duty working conditions.
Not suitable for severe vibration.

Accessories

Diaphragm seals
Check valves
Syphons
Alternative thread sizes

Pressure Ranges	
-1-0 bar/psi	0-10 bar/psi
-1-0-0,6 bar/psi	0-16 bar/psi
-1-0-1,5 bar/psi	0-25 bar/psi
-1-0-3 bar/psi	0-40 bar/psi
-1-0-5 bar/psi	0-60 bar/psi
-1-0-9 bar/psi	0-100 bar/psi
-1-0-15 bar/psi	0-160 bar/psi
0-0,6 bar/psi	0-250 bar/psi
0-1 bar/psi	0-400 bar/psi
0-1,6 bar/psi	0-600 bar/psi
0-2,5 bar/psi	0-1000 bar/psi
0-4 bar/psi	0-1600 bar/psi

Type No.	Connection	Mounting
RX-2010	bottom	direct
RX-2015	bottom	back flange for surface mounting
RX-2011	back	direct
RX-2017	back	clamp fixing for flush mounting

Measuring System:	C-type, bronze, soldered brass connection C-type, all stainless, welded up to 100 bar Above 100 bar screw type, stainless AISI 316, welded bourdon
Standard Connection:	G 3/8 B G 1/2 B

Rexotherm AB Box 817, S-565 18 Mullsjö **Tel:** 0392-377 00 **E-post:** info@rexotherm.com

REXO THERM

Tecnical Data

RX-2010-100

REXOTHERM

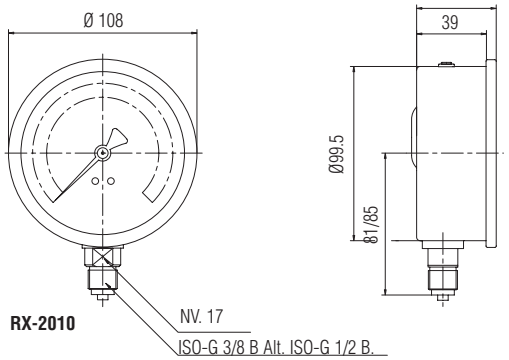

RX-2010

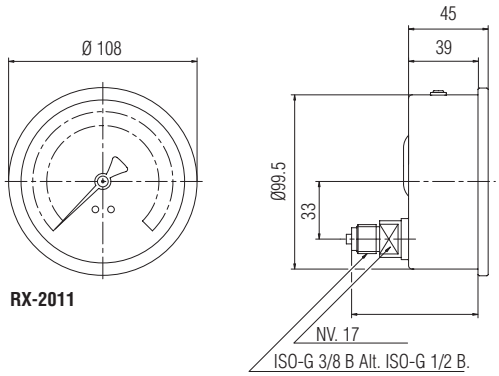

RX-2011

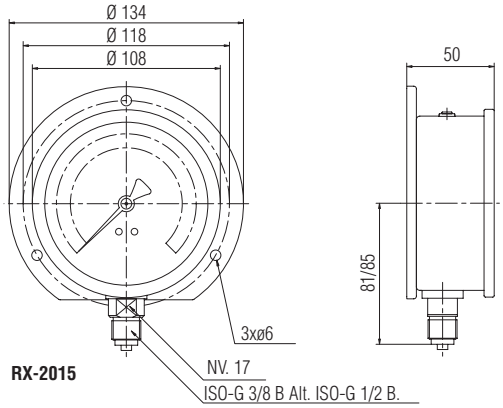

RX-2015

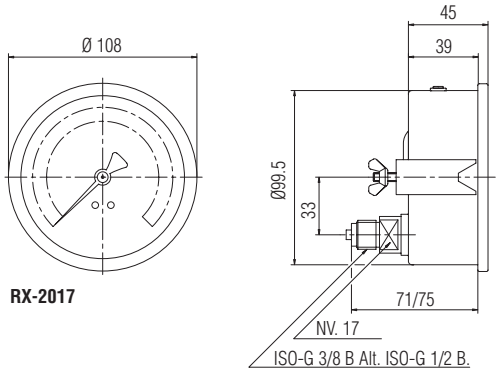

RX-2017

Measuring System/Material

C-type bronze/C-type stainless bourdon up to 100 bar.
Above 100 bar screw type stainless steel AISI 316 welded bourdon.

Movement

Stainless steel.

Dial

Concentric scale, white dial and black markings.

Units of measurement

Gauges are supplied as standard with dual scale bar/psi.
Single scale in bar only can be supplied.
See table overleaf for standard ranges.

Accuracy

+-1% of scale.

Load Capacity

Max. load:	100% of range for static working pressure.
	88% of range for cyclic pressure.
Overload	Up to 130% of scale for temporary surge.

Casing

Stainless steel AISI 304. Complete with valve and blow out device.

Window

Lexan 121R, Polycarbonate.

Mounting

See table overleaf and drawings at side.

Connection

G3/8 B, G1/2 B standard.

Working Temperature

Max. +100°C for stainless steel.
+70°C for bronze.

Weight

Approx. 0,8 kg

Rexotherm AB Box 817, S-565 18 Mullsjö **Tel:** 0392-377 00 **E-post:** info@rexotherm.com

REXO THERM